Product NO.	DOSIN-803-0016			
REV	DESCRIPTION	DWN	DATE	APPROVEN
A	First issue	Mr. Wang	2010/08/07	John kine
B	Add :DOSIN-803-0016	Zelin. Zhang	2012/09/30	John kine

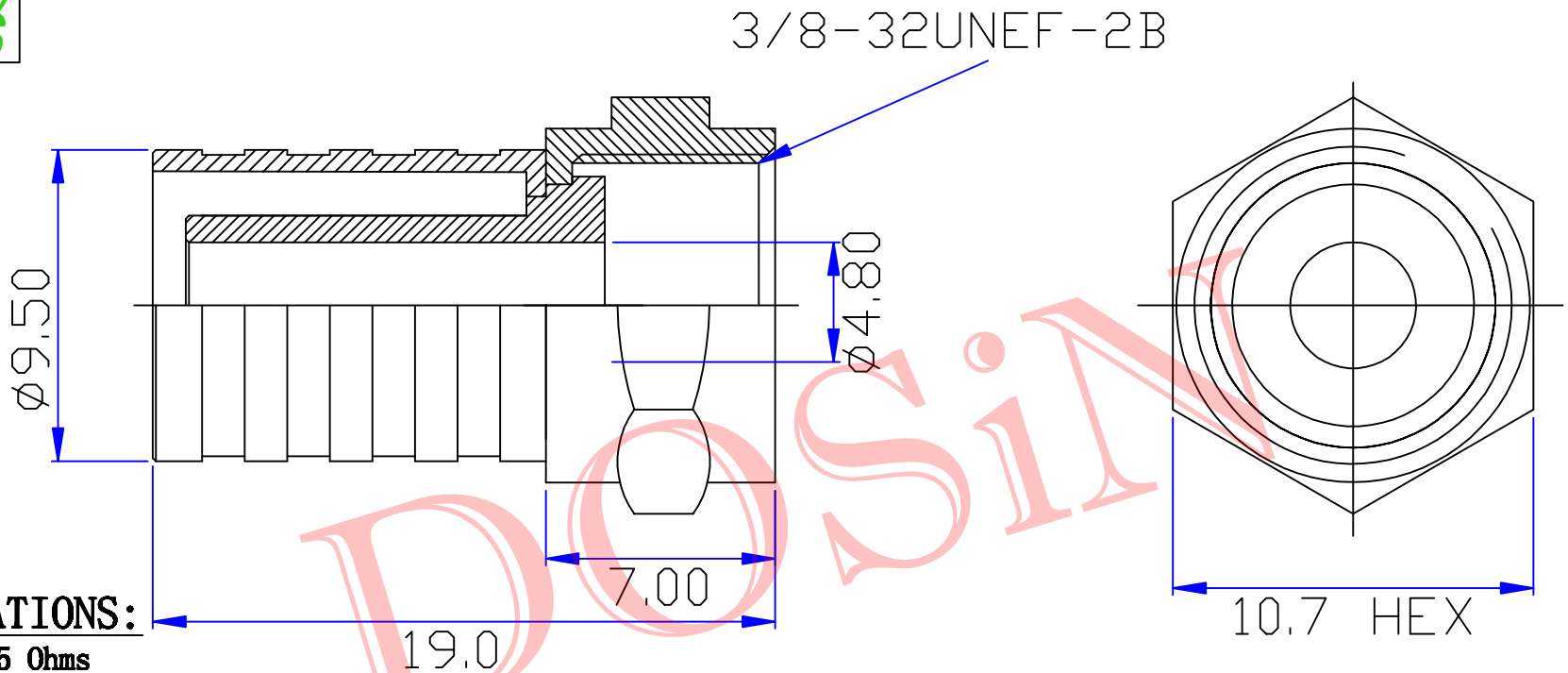

SPECIFICATIONS:

Impedance: 75 Ohms
Frequency Range:DC~3G
VSWR:30DdB Return loss @ 1GHZ
Working Voltage:15 watts continuous
Insulation Resistance:5000 Ohms min
Temperature Range:-40℃ TO +60℃
Drawings products are in line with ROHS standards

NO	Component Number	Material	Finish
1	Shell	Zinc	NI:80-120u"
2	Body	Zinc	NI:80-120u"
3			
4			
5			
6			
7			
8			
9			
10			

NOTE:

DRAWN	Zelin. Zhang	2012/09/30
CHECKED		
APPROVALS	John Kine	30/09.2012

Tolerance	X.	±0.15
	X.X	±0.10
	X.XX	±0.05
	Angular	±5°
View		
UNIT	MM	
SCALE	1:1	

DOSIN —RF CONNECTOR Dosin Industrial (H.K) Co. Ltd
东莞市德索五金电子制品有限公司
Dosin Hardware Electronics Co., Ltd
E-mail:dosin2005@163.com
dosin2005@dosin-china.com
Web:http://www.dosincom.com
TEL:(0086)769-81153906
FAX:(0086)769-81875836

Name: F Plug Stright For RG/6

SIZE	Product NO.	REV
A	DOSIN-803-0016	B

DateTime	CAD FILE	SHEET:
2012/09/30	H/company drawings/BD	1 OF 1

DOSIN